PRIME DESIGN™

A Safe Fleet Brand

HRR3-E-PM-HM

ErgoRack, Promaster Low/High Roof

Three Crossbars, Powder Coat Finish
Rack Weight (empty): 176 lbs

*Callouts in this Configuration Overview indicate full module assemblies only.

For details on individual parts, please refer to the linked Module Overviews below.

A: ..... FBM-1007-BLK Mounting System
B:..... CBA-3008 Hybrid Crossbar Assembly
C: ..... CBR-0008 Mid Crossbar Kit
D: ..... FEA-0019 Rotation Driveshaft Assembly
E:..... FEA-0020 Rotation Driveshaft Assembly

Modular Assembly Manuals

ErgoRack Van—Load specifications:

Check vehicle manufacturer recommendations for roof capacity weight limits.

CROSSBAR SPACING	STEP LADDER	EXT. LADDER
4 ft Spacing	6 – 8 ft.	16 – 20 ft.
5 ft Spacing	8 – 10 ft.	16 – 24 ft.
6 ft Spacing	8 – 12 ft.†	16 – 28 ft.
7 ft Spacing	10 – 12 ft.†	20 – 32 ft.
8 ft Spacing	10 – 12 ft.†	20 – 36 ft.

†Rotation Configurations: 12 ft. step ladders require an extended upper add–on component.

USOV-HRR3EPMHM-US01 Rev-A 0122

**Example shown with 118" Wheelbase Configuration*

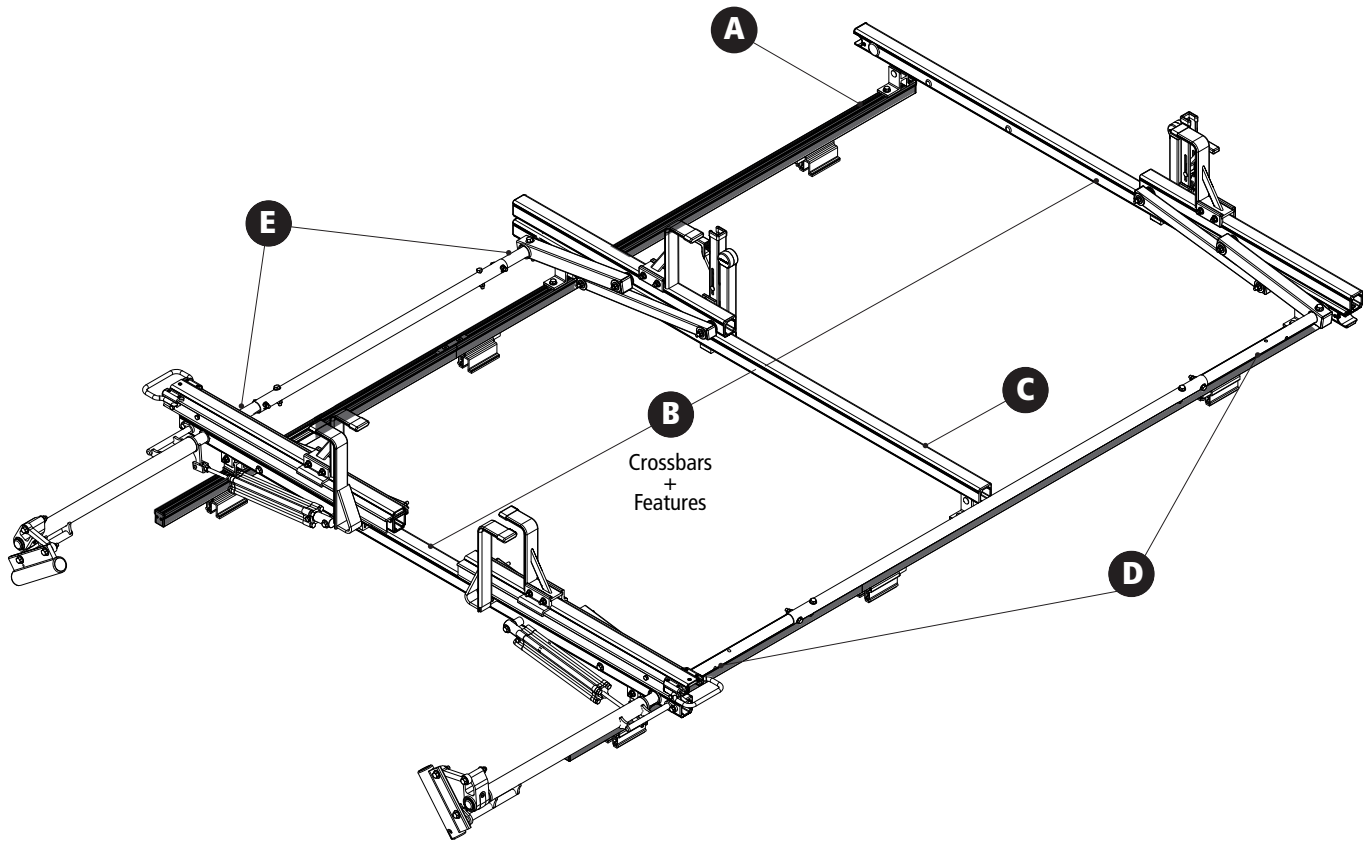

PRIME DESIGN, A SAFE FLEET BRAND ▪ Address: 580 Opperman Drive, Eagan, MN 55123 ▪ Toll Free: 1.8.PRIME.RACK ▪ Fax: 651-552-1799 ▪ Email: info@primedesign.net ▪ Website: www.primedesign.net
TM & © 2021 PRIME DESIGN. PROTECTED BY ONE OR MORE OF THE FOLLOWING PATENT NO.'s 6427889, 6764268, 6971563, 8991889, 9415726, 9506292, 9481313, 9776476, 9796340, 10470565, 10486608, 10501022 AND OTHER PATENTS PENDING

PRIME DESIGN™

A Safe Fleet Brand

HRR3-E-PM-HM

ErgoRack, Promaster Low/High Roof

Approximate dimensions as shown:

All Wheelbases

A: Rack Width ..... 79″
B: Rack Height ..... 18.50″
C: Rear Crossbar Offset (L & R) ..... Even
D: Mount Bolt Spacing L/R ..... Set at install

118″ Wheelbase, Low Roof

E: Crossbar Spacing (rear to center) ..... 4′
F: Crossbar Spacing (center to front) ..... 2′–4′
G: Total Crossbar Spacing ..... 6′–8′
H: Rack Length ..... 113″

136″ Wheelbase, Low/High Roof

I: Crossbar Spacing (rear to center) ..... 4′
J: Crossbar Spacing (center to front) ..... 2′–4′
K: Total Crossbar Spacing ..... 6′–8′
L: Rack Length ..... 130″

Compatible Accessories Available

(Sold Separately)

Rear Access Ladder ..... AAL Series
8′–12′ Conduit Carriers ..... CON Series
WorkPro LED Lighting ..... LED Series
Systems and Safety Components ..... RVS Series
Safety monitoring ..... DS2 Series

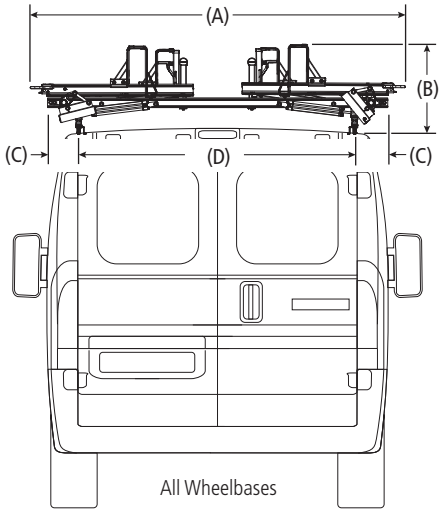

All Wheelbases

Low/High Roof Configurations

Rear Drive Shaft Offset: 29″

Note: The end of the driveshaft must not extend beyond the vehicle bumper

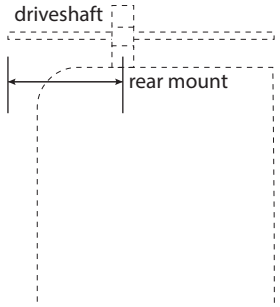

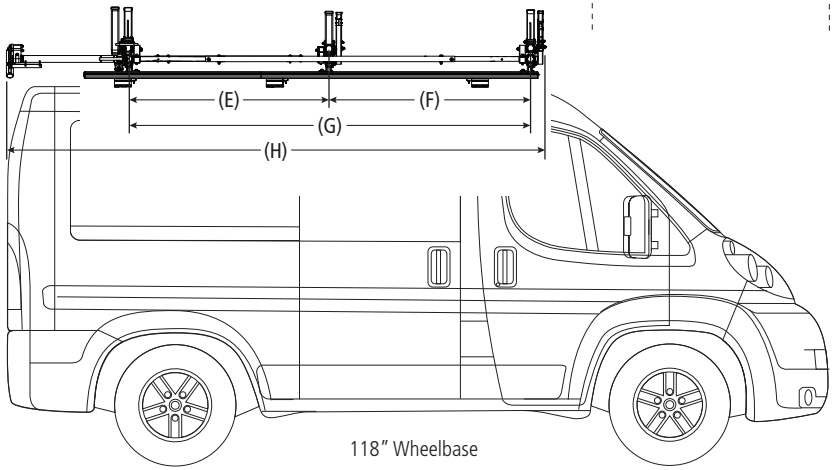

118″ Wheelbase

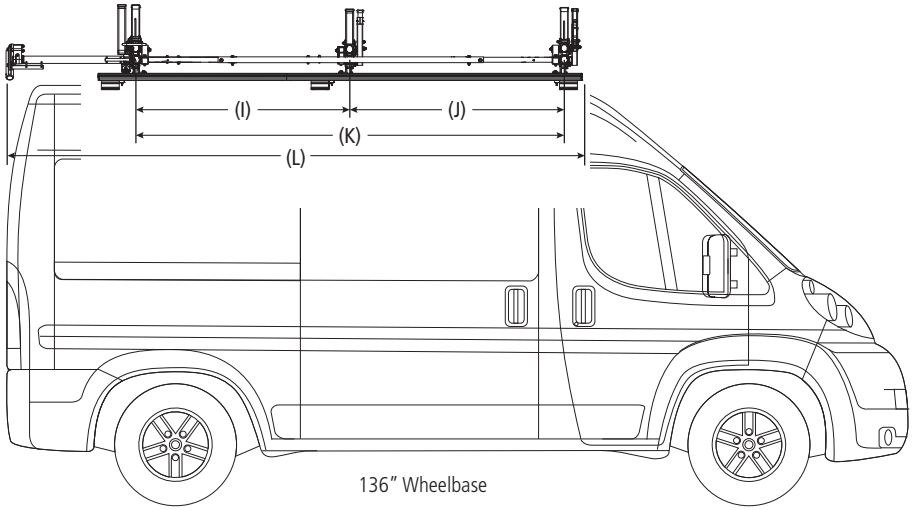

136″ Wheelbase

PRIME DESIGN, A SAFE FLEET BRAND ▪ Address: 580 Opperman Drive, Eagan, MN 55123 ▪ Toll Free: 1.8.PRIME.RACK ▪ Fax: 651-552-1799 ▪ Email: info@primedesign.net ▪ Website: www.primedesign.net

TM & © 2021 PRIME DESIGN. PROTECTED BY ONE OR MORE OF THE FOLLOWING PATENT NO.'s 6427889, 6764268, 6971563, 8991889, 9415726, 9506292, 9481313, 9776476, 9796340, 10470565, 10486608, 10501022 AND OTHER PATENTS PENDING

USOV-HRR3EPMHM-US01 Rev-A 0122

PRIME DESIGN™

A Safe Fleet Brand

HRR3-E-PM-HM

ErgoRack, Promaster High Roof

Approximate dimensions as shown:

All Wheelbases

A: Rack Width ..... 79″
B: Rack Height ..... 18.50″
C: Rear Crossbar Offset (L & R) ..... Even
D: Mount Bolt Spacing L/R ..... Set at install

159″ Wheelbase, High Roof

E: Crossbar Spacing (rear to center) ..... 4′
F: Crossbar Spacing (center to front) ..... 2′–4′
G: Total Crossbar Spacing ..... 6′–8′
H: Rack Length ..... 154″

159″ Extended Wheelbase, High Roof

I: Crossbar Spacing (rear to center) ..... 4′
J: Crossbar Spacing (center to front) ..... 2′–4″
K: Total Crossbar Spacing ..... 6′–8′
L: Rack Length ..... 169″

Compatible Accessories Available

(Sold Separately)

Rear Access Ladder ..... AAL Series
8′–12′ Conduit Carriers ..... CON Series
WorkPro LED Lighting ..... LED Series
Systems and Safety Components ..... RVS Series
Safety monitoring ..... DS2 Series

High Roof Configurations

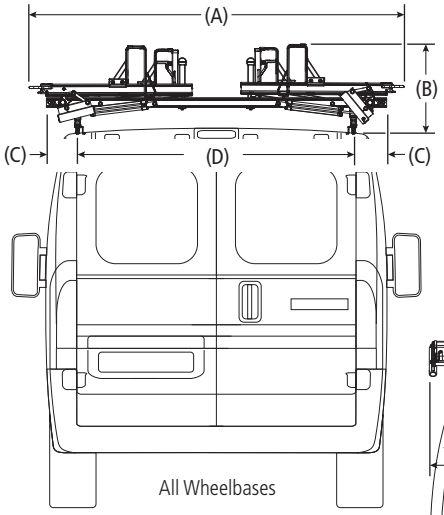

All Wheelbases

Rear Drive Shaft Offset: 29″

Note: The end of the driveshaft must not extend beyond the vehicle bumper

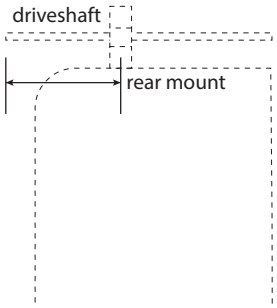

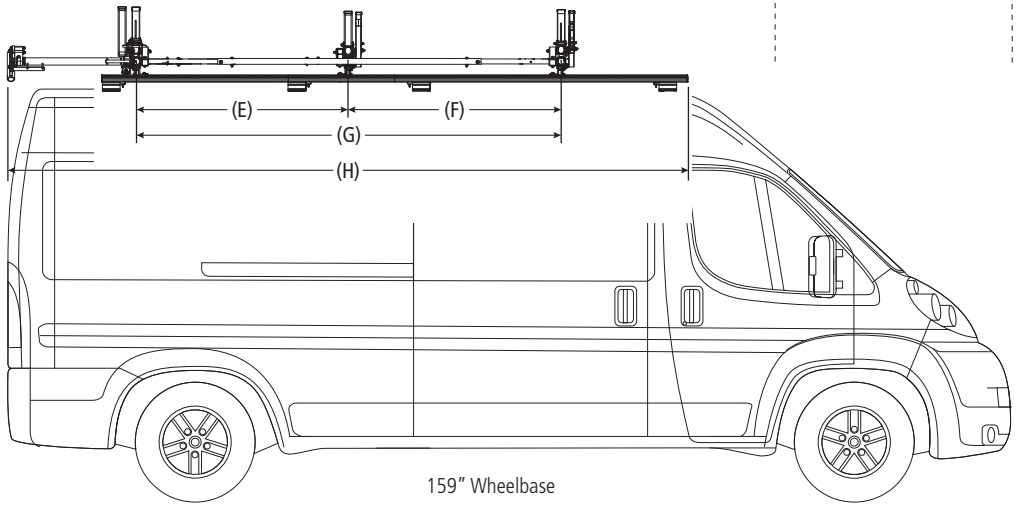

159″ Wheelbase

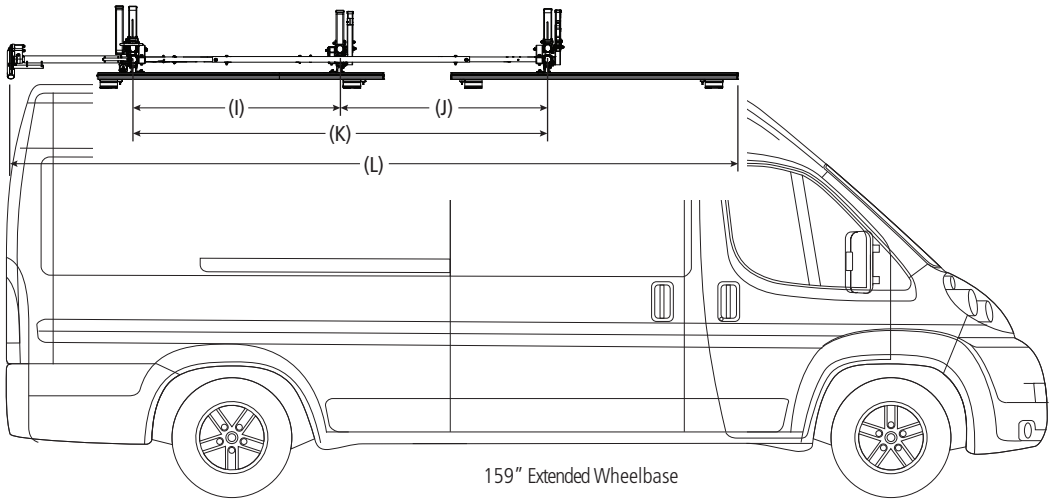

159″ Extended Wheelbase

PRIME DESIGN, A SAFE FLEET BRAND ▪ Address: 580 Opperman Drive, Eagan, MN 55123 ▪ Toll Free: 1.8.PRIME.RACK ▪ Fax: 651-552-1799 ▪ Email: info@primedesign.net ▪ Website: www.primedesign.net

TM & © 2021 PRIME DESIGN. PROTECTED BY ONE OR MORE OF THE FOLLOWING PATENT NO.'s 6427889, 6764268, 6971563, 8991889, 9415726, 9506292, 9481313, 9776476, 9796340, 10470565, 10486608, 10501022 AND OTHER PATENTS PENDING