PRIME DESIGN™

A Safe Fleet Brand

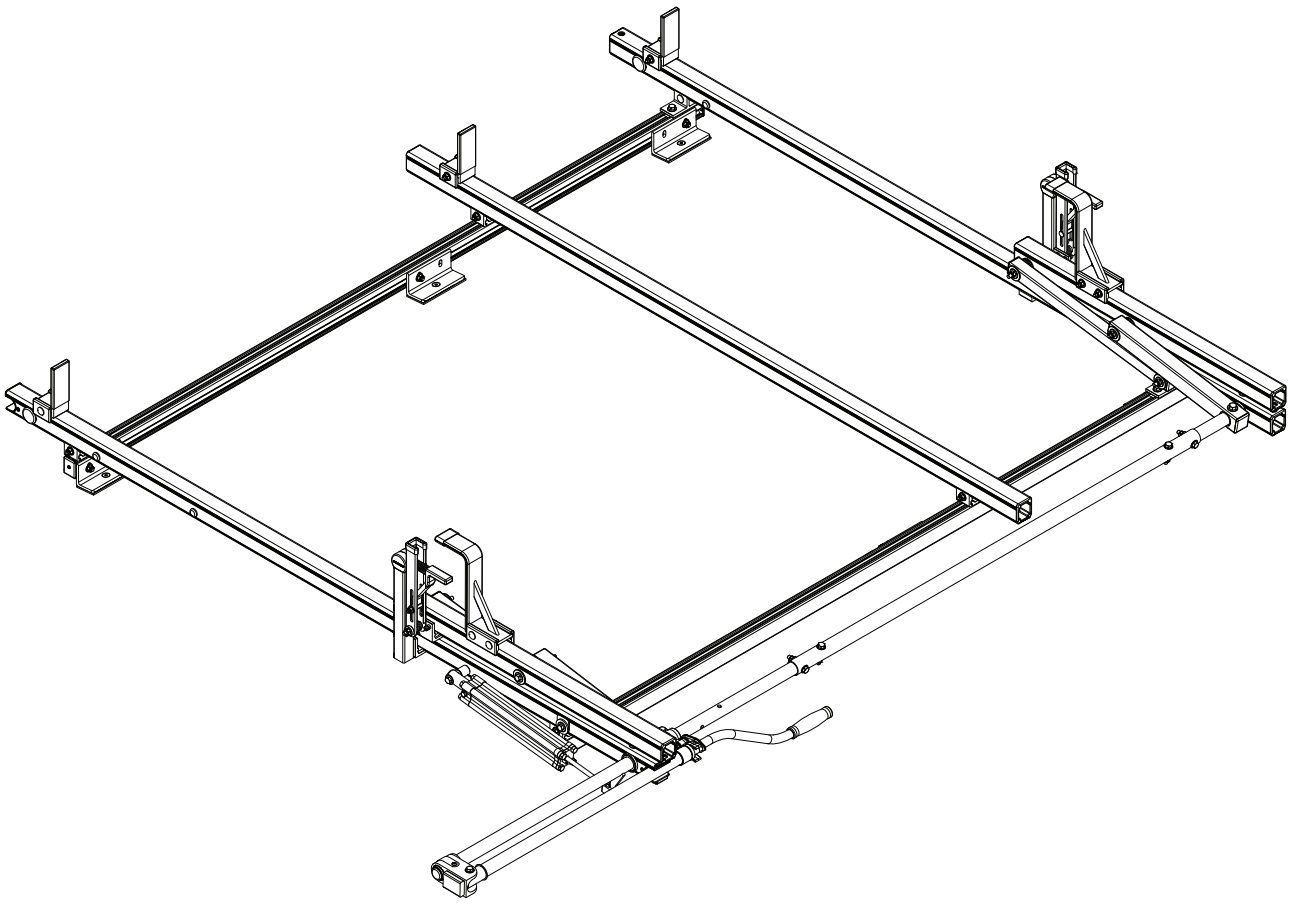

VBR3

CONTENTS OVERVIEW

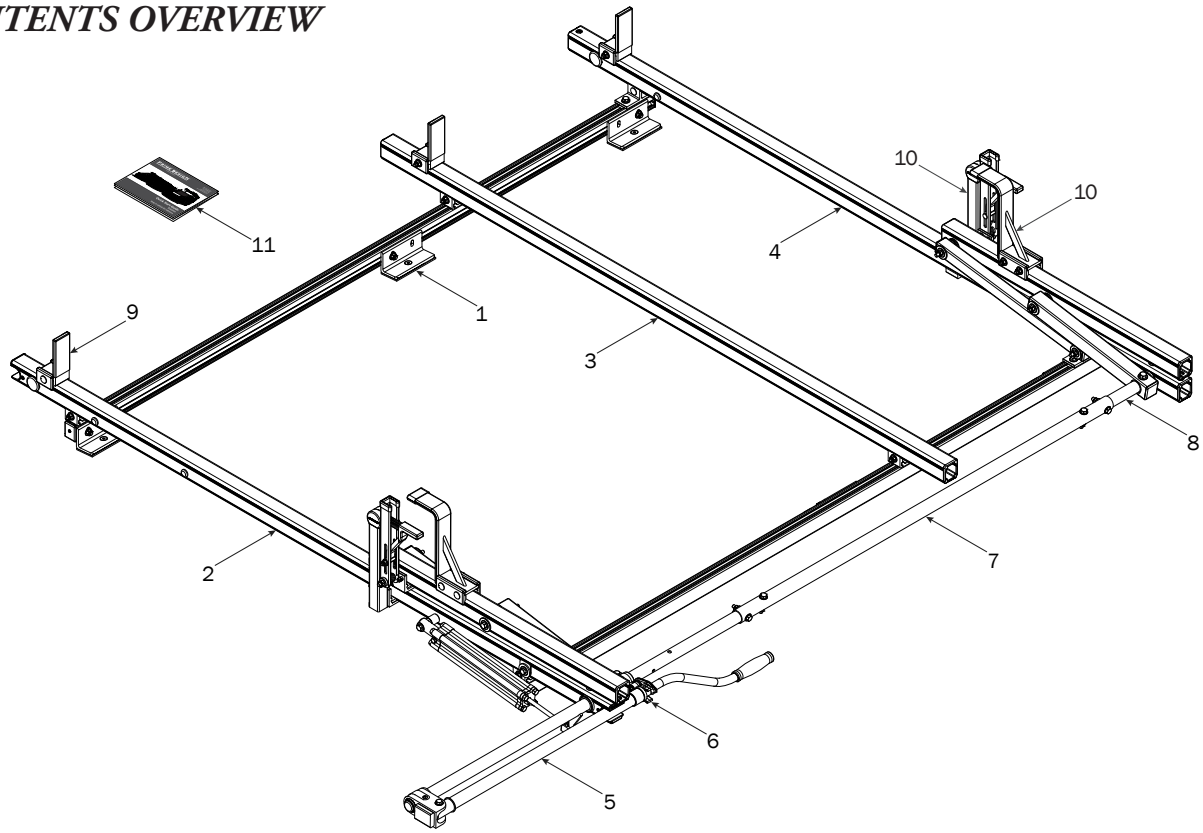

1—FBM3-0096 ..... (Qty 1)
Channels w/ Hardware

74" Channels, Pre-assembled (2X)

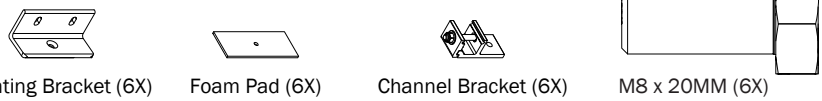

Mounting Bracket (6X) Foam Pad (6X) Channel Bracket (6X) M8 x 20MM (6X) M8 X 25MM (6X)

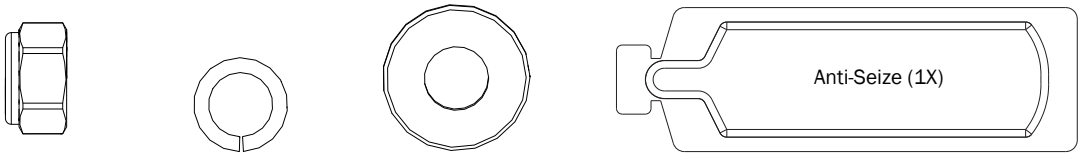

M8 Lock Nut (6X) 5/16" Lock Washer (6X) 5/16" Flat Washer (12X)

2—Rear Crossbar Assembly ..... (Qty 1)

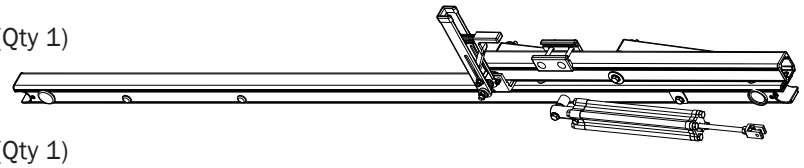

3—Center Crossbar Assembly ..... (Qty 1)

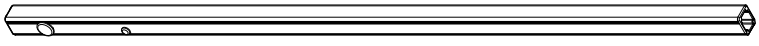

4—Front Crossbar Assembly ..... (Qty 1)

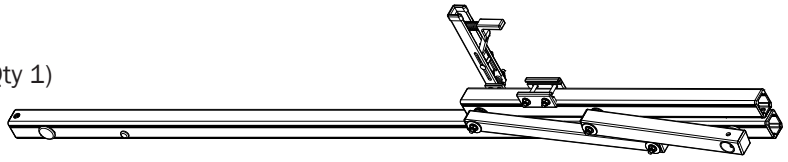

5—Rear Drive Shaft ..... (Qty 1)
Right Hand, B4 Version, 46.00"

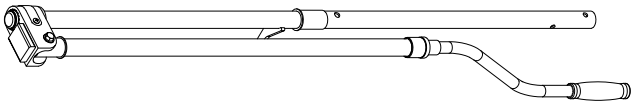

TM & © 2019 PRIME DESIGN. PROTECTED BY ONE OR MORE OF THE FOLLOWING PATENT NO.'s 6764268, 6971563, 2364879, 8857689, 8511525, 8991889, 2271515, 2364897, 9506292, 9481313, 9481314, 9796340, 6202807, 6427889, 9415726 AND OTHER PATENTS PENDING

6—Handle Latch Assembly ..... (Qty 1)

7—Connecting Bar..... (Qty 1)
48.00”

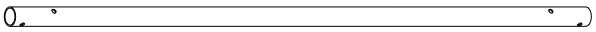

8—Front Drive Shaft ..... (Qty 1)
B Version, 35.75”

9—Ladder Stop Assembly ..... (Qty 2)
1.75”

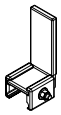

10—L & Z Post Kit..... (Qty 1)
Adj. Z Post, 7.25”, L Post, w/HKT-0160

M6 x 20MM (2X)

¼ Lock Washer (2X)

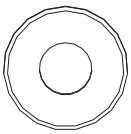

¼ Flat Washer (2X)

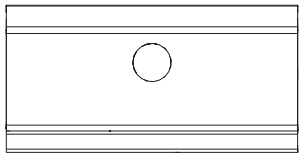

L Post Bracket Clamp (2X)

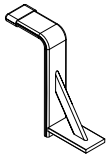

Z Post (2X)

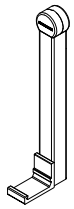

L Post (2X)

11—USQSG-Ergorack ..... (Qty 1)
Quick Start Guide, Rotation

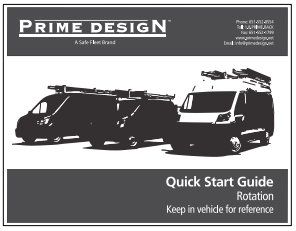

12—HKT-8163 (Not called out in Overview)..... (Qty 1)

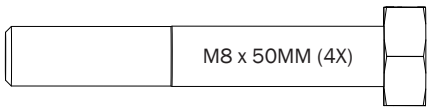

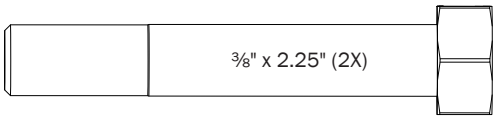

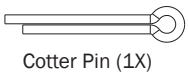

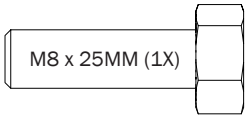

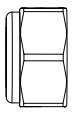

M8 Lock Nut (5X)

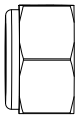

⅜" Lock Nut (2X)

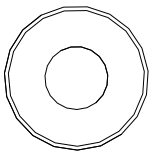

5⁄16 " Flat Washer (10X)

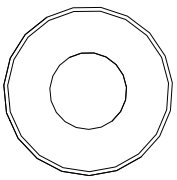

⅜" Flat Washer (4X)

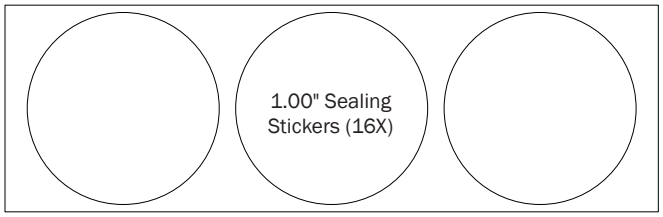

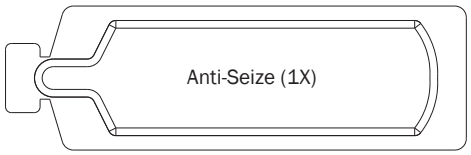

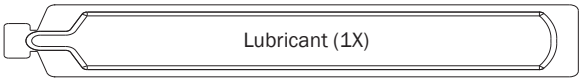

TM & © 2019 PRIME DESIGN. PROTECTED BY ONE OR MORE OF THE FOLLOWING PATENT NO.'s 6764268, 6971563, 2364879, 8857689, 8511525, 8991889, 2271515, 2364897, 9506292, 9481313, 9481314, 9796340, 6202807, 6427889, 9415726 AND OTHER PATENTS PENDING

RIGHT SIDE ASSEMBLY SEQUENCE

Prior to assembling the Channels and hardware, the OEM roof holes must be chased using an M8 x 1.25 Chasing or Thread Cleaning tap and fluid. Doing so will ensure accurate torque is achieved.

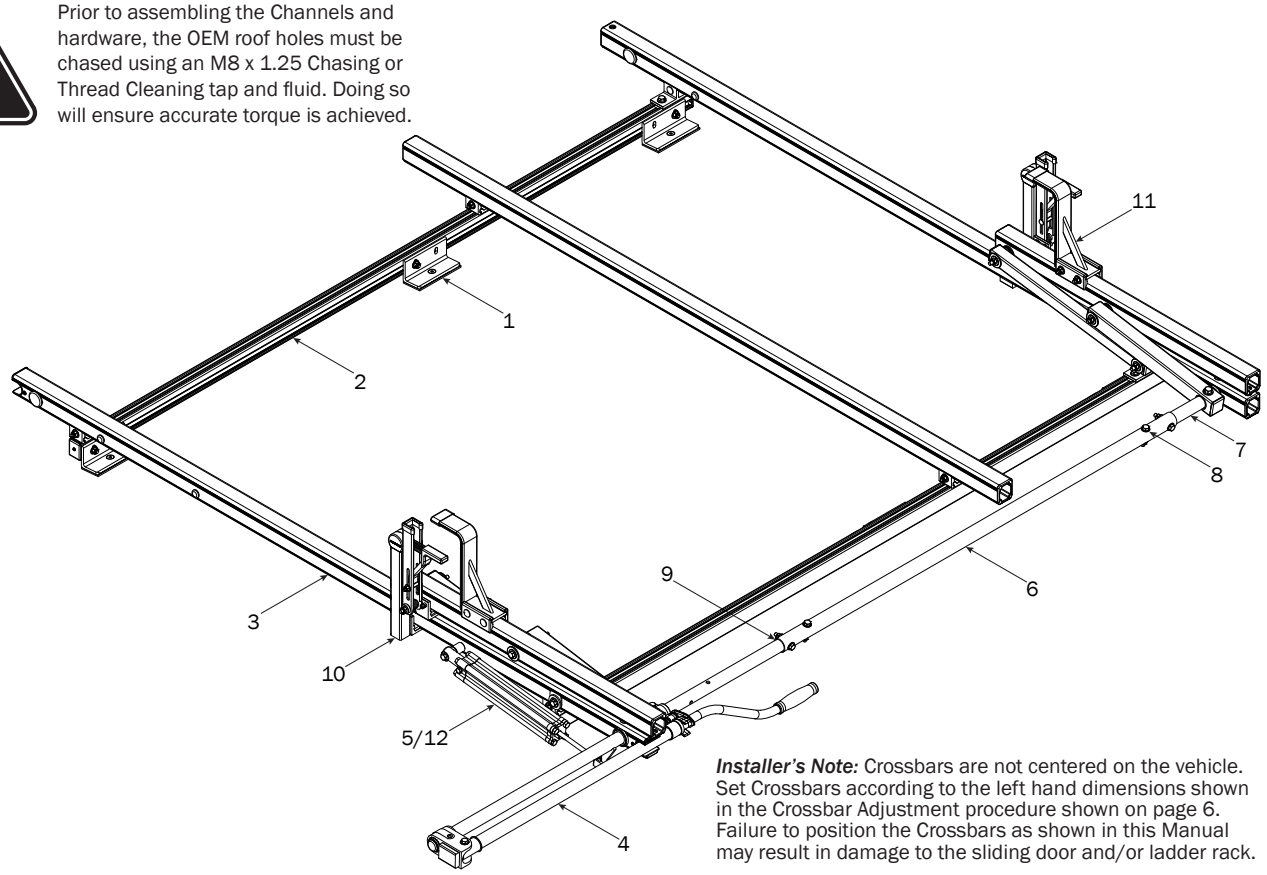

Installer's Note: Crossbars are not centered on the vehicle. Set Crossbars according to the left hand dimensions shown in the Crossbar Adjustment procedure shown on page 6. Failure to position the Crossbars as shown in this Manual may result in damage to the sliding door and/or ladder rack.

MOUNTING BRACKETS

1 Apply Anti-Seize to all M8 x 25MM Flat Head Screws and install the Channel Mounting Brackets with Foam Pads onto the vehicle's roof mounting holes. Do not tighten screws until Step 2.3

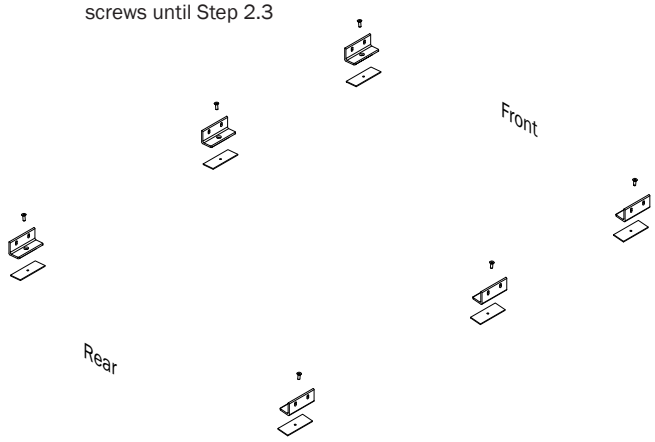

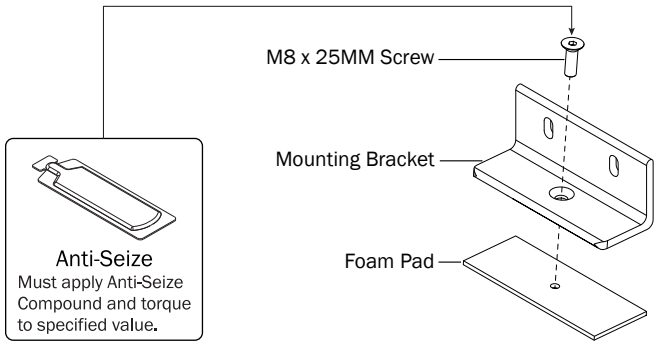

CHANNELS

2.1 Apply Anti-Seize to all M8 T Bolt studs, then attach the Channels to the Mounting Brackets using the indicated hardware. Do not tighten until Step 2.2

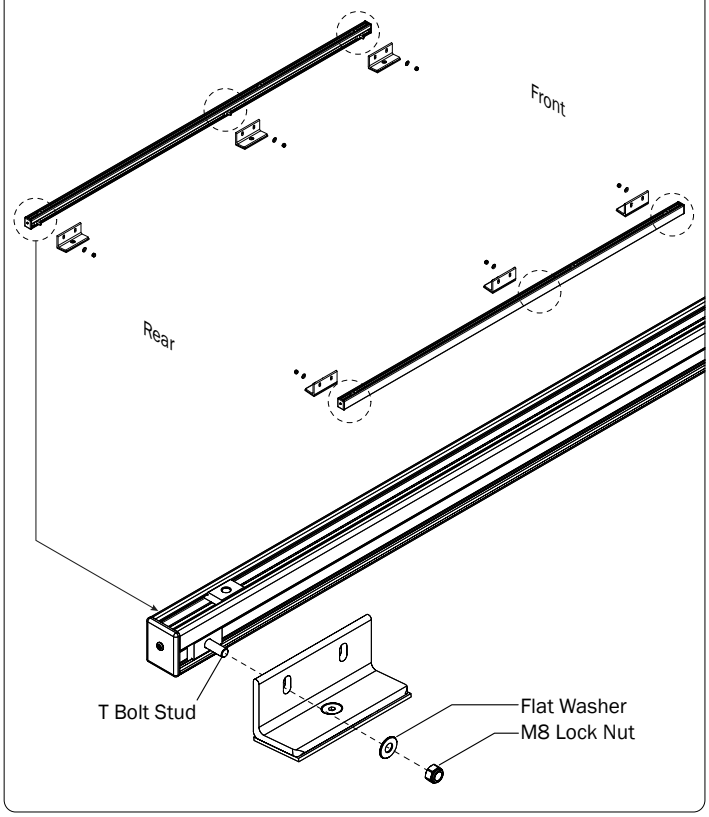

TM & © 2019 PRIME DESIGN. PROTECTED BY ONE OR MORE OF THE FOLLOWING PATENT NO.'s 6764268, 6971563, 2364879, 8857689, 8511525, 8991889, 2271515, 2364897, 9506292, 9481313, 9481314, 9796340, 6202807, 6427889, 9415726 AND OTHER PATENTS PENDING

VBR3-FT21B ASSEMBLY INSTRUCTIONS–RIGHT SIDE ROTATION

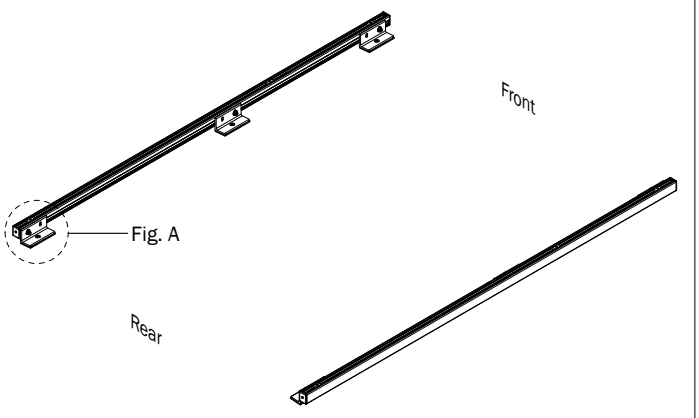

2.2

Position the Channel ends until contacting the End Caps as shown in Figure A.

Torque all Mounting Bracket Nuts to 90 in-lb

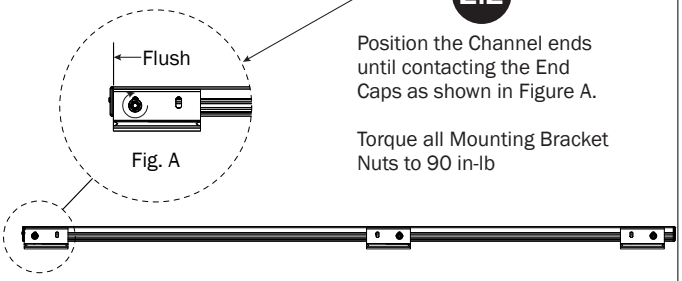

2.3 Torque all M8 x 25MM Flat Head Screws to 150 in-lbs. Apply Silicone Sealant to screw heads to seal against water intrusion.

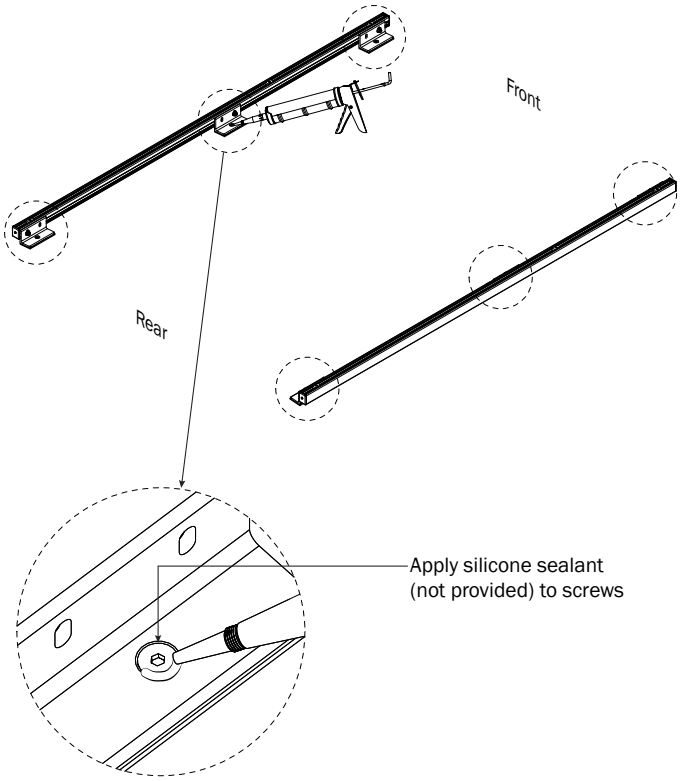

2.4 Attach Mounting Brackets to the Aluminum Strip Nuts located in the Channels

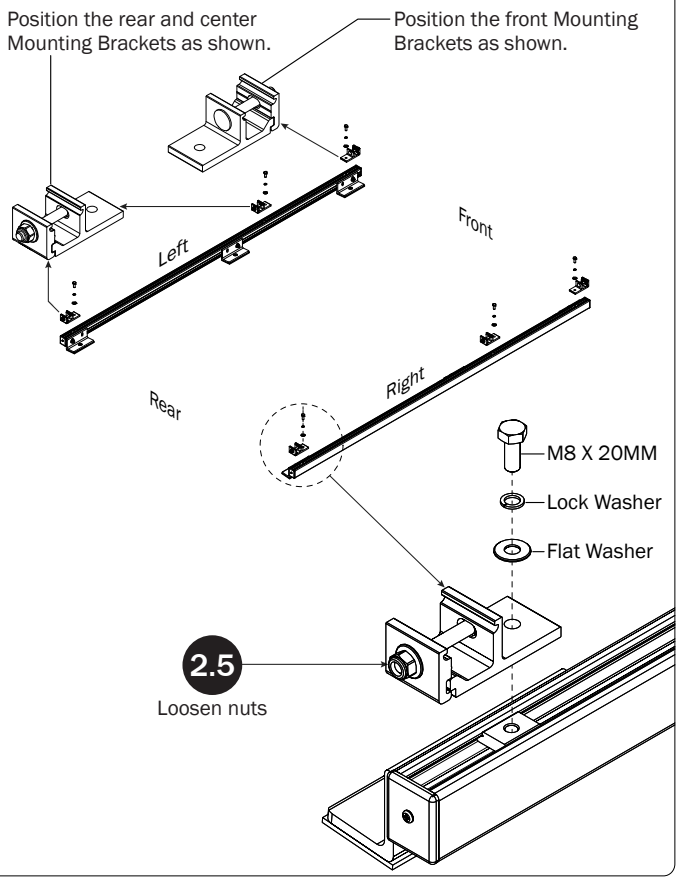

2.6 Position Mounting Brackets to designated dimension shown below, then torque the M8 X 20MM bolt to 90 in-lbs. Proceed to Step 3.1.

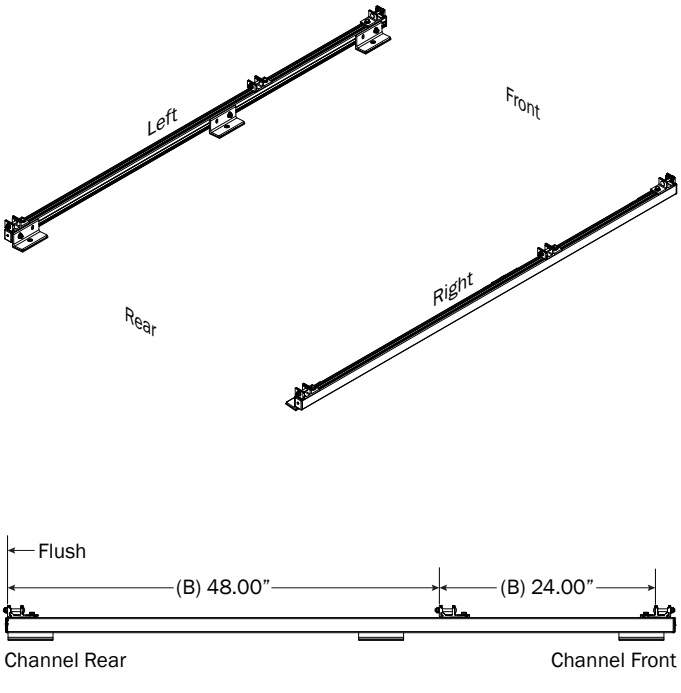

PRIME DESIGN™ A Safe Fleet Brand

PRIME DESIGN, A SAFE FLEET BRAND • Address: 1689 Oakdale Avenue #102, West St Paul, Minnesota 55118 • Phone: 651-552-8554 • Toll Free: 1.8.PRIME.RACK • Fax: 651-552-1799 • Email: info@primedesign.net • Website: www.primedesign.net
TM & © 2019 PRIME DESIGN. PROTECTED BY ONE OR MORE OF THE FOLLOWING PATENT NO.'s 6764268, 6971563, 2364879, 8857689, 8511525, 8991889, 2271515, 2364897, 9506292, 9481313, 9481314, 9796340, 6202807, 6427889, 9415726 AND OTHER PATENTS PENDING

PRIME DESIGN™
A Safe Fleet Brand

CROSSBARS

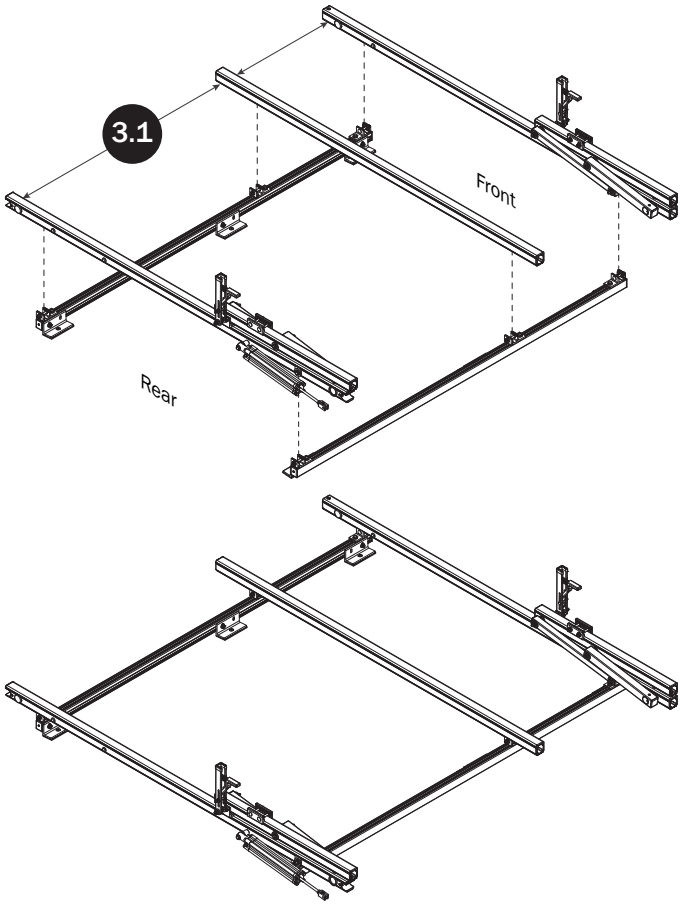

CROSSBAR ADJUSTMENT

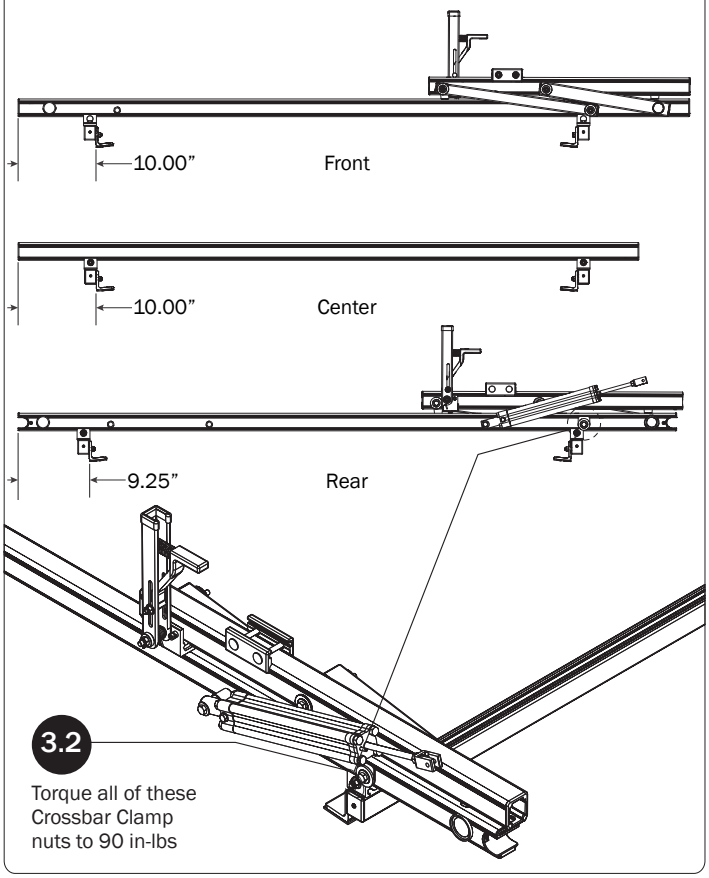

REAR DRIVE SHAFT

NOTE: For instructional clarity, the FBM Mounting System will not be shown for the remainder of this Assembly Manual.

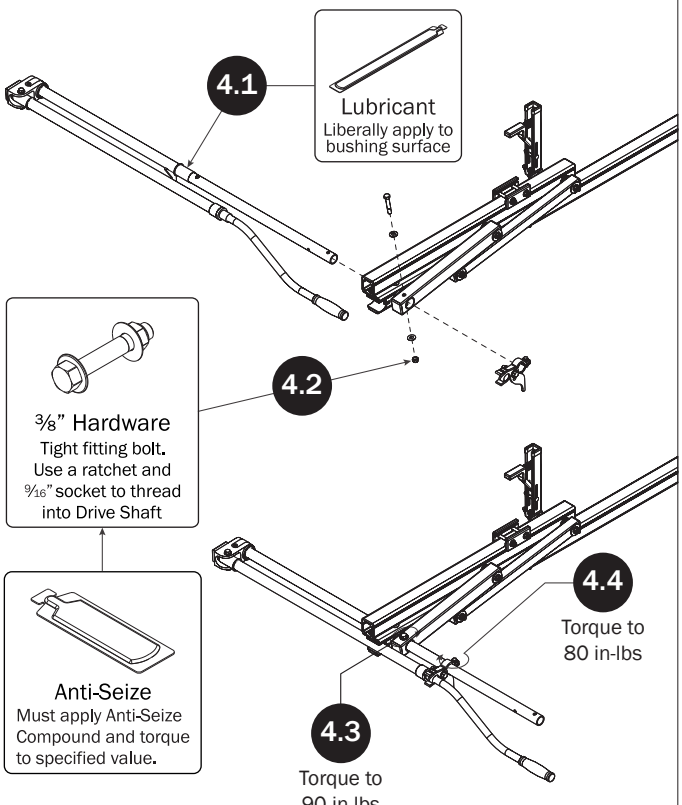

CYLINDER HARDWARE

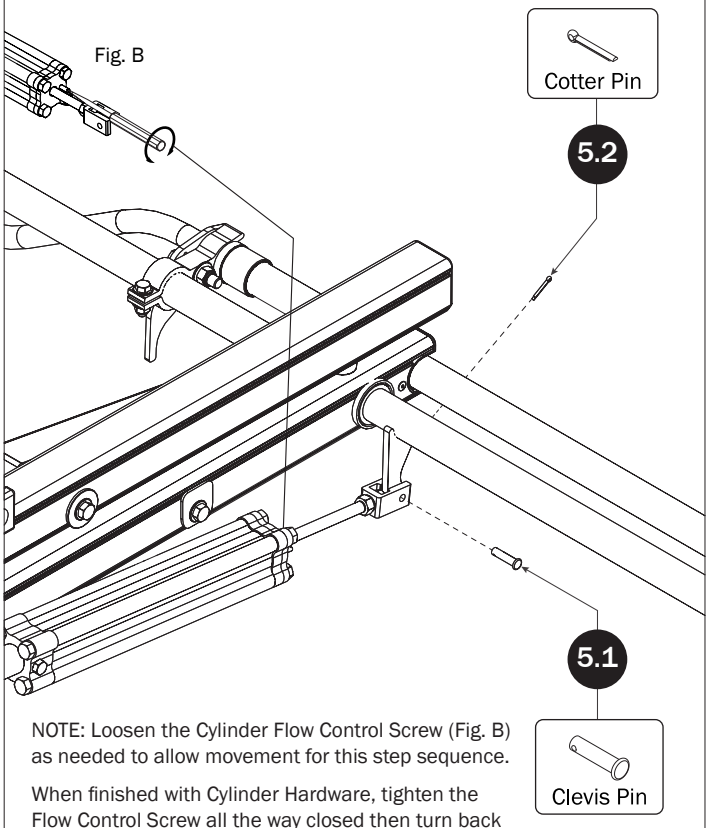

NOTE: Loosen the Cylinder Flow Control Screw (Fig. B) as needed to allow movement for this step sequence.

When finished with Cylinder Hardware, tighten the Flow Control Screw all the way closed then turn back open 1½ turn.

PRIME DESIGN, A SAFE FLEET BRAND • Address: 1689 Oakdale Avenue #102, West St Paul, Minnesota 55118 • Phone: 651-552-8554 • Toll Free: 1.8.PRIME.RACK • Fax: 651-552-1799 • Email: info@primedesign.net • Website: www.primedesign.net
TM & © 2019 PRIME DESIGN. PROTECTED BY ONE OR MORE OF THE FOLLOWING PATENT NO.'s 6764268, 6971563, 2364879, 8857689, 8511525, 8991889, 2271515, 2364897, 9506292, 9481313, 9481314, 9796340, 6202807, 6427889, 9415726 AND OTHER PATENTS PENDING

CONNECTING BAR

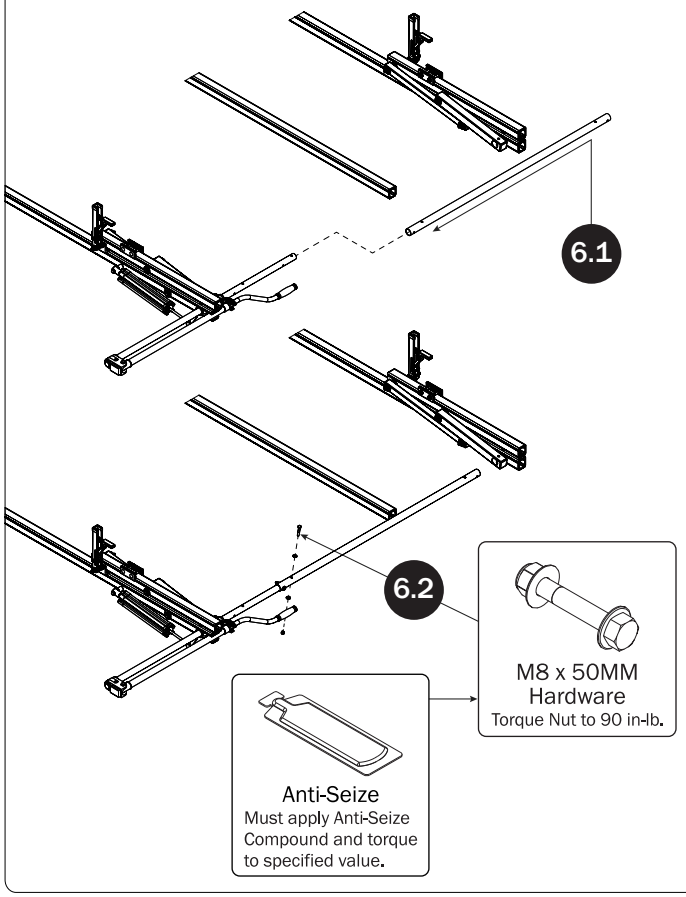

FRONT DRIVE SHAFT

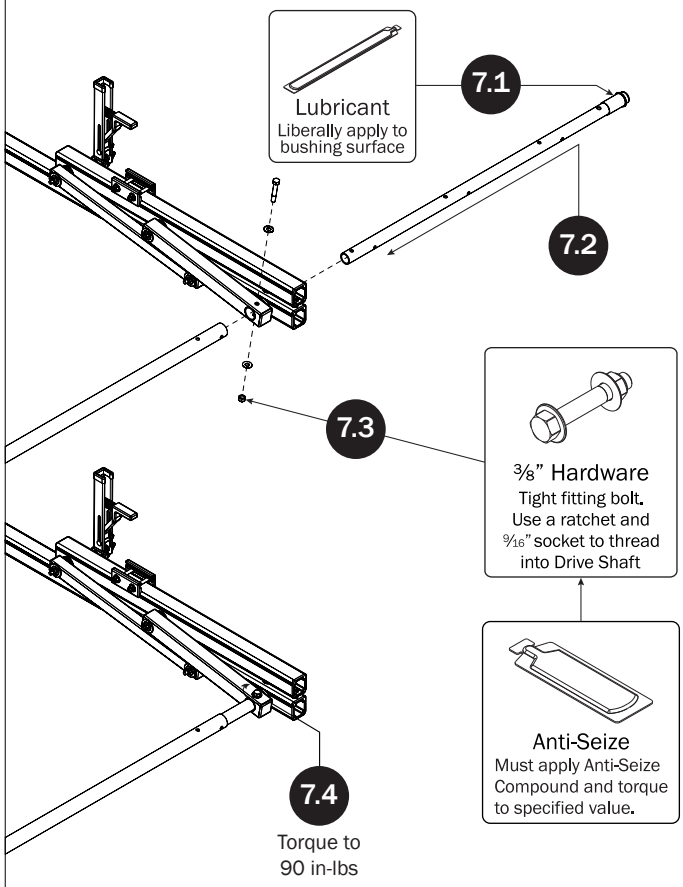

CONNECTING BAR FASTENERS

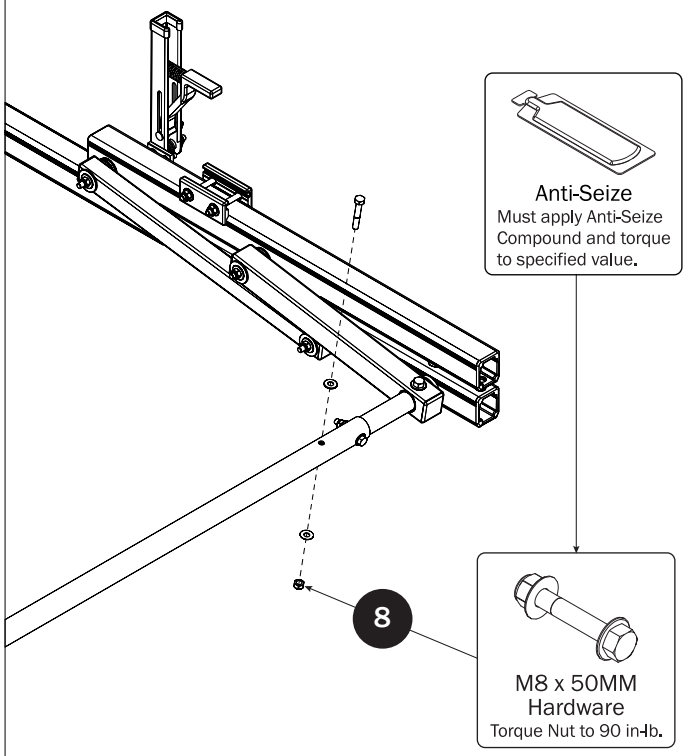

DRIVE SHAFT SEALING

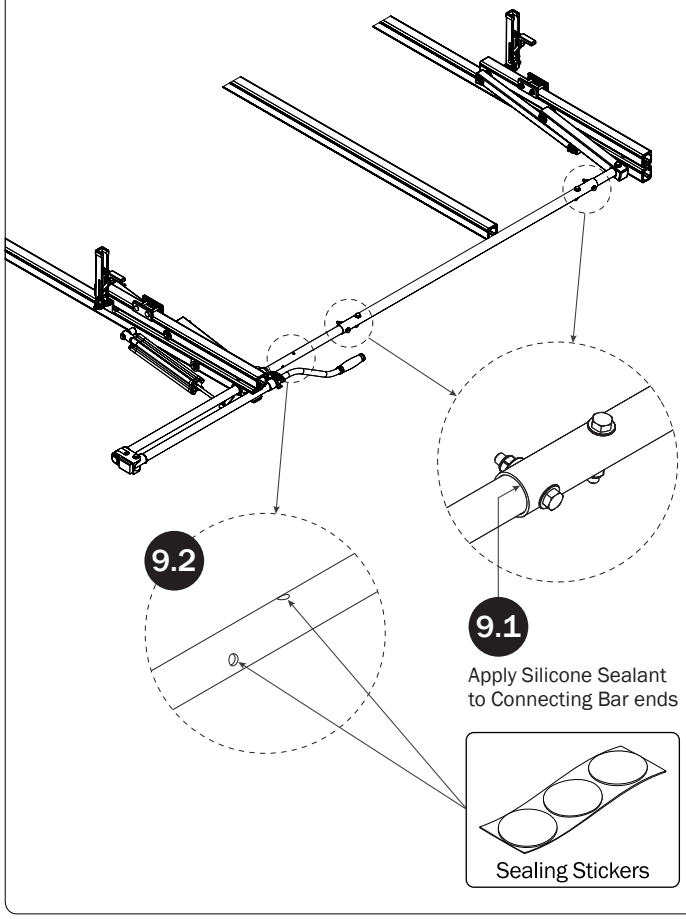

PRIME DESIGN™
A Safe Fleet Brand

PRIME DESIGN, A SAFE FLEET BRAND • Address: 1689 Oakdale Avenue #102, West St Paul, Minnesota 55118 • Phone: 651-552-8554 • Toll Free: 1.8.PRIME.RACK • Fax: 651-552-1799 • Email: info@primedesign.net • Website: www.primedesign.net
TM & © 2019 PRIME DESIGN. PROTECTED BY ONE OR MORE OF THE FOLLOWING PATENT NO.'s 6764268, 6971563, 2364879, 8857689, 8511525, 8991889, 2271515, 2364897, 9506292, 9481313, 9481314, 9796340, 6202807, 6427889, 9415726 AND OTHER PATENTS PENDING

L POSTS

SEE QUICK START GUIDE FOR ADJUSTMENTS

NOTE: The Auto Clamps may come preset from the factory for packaging purposes only. To assemble the L Posts to the Crossbars, the Auto Clamps may need to be repositioned.

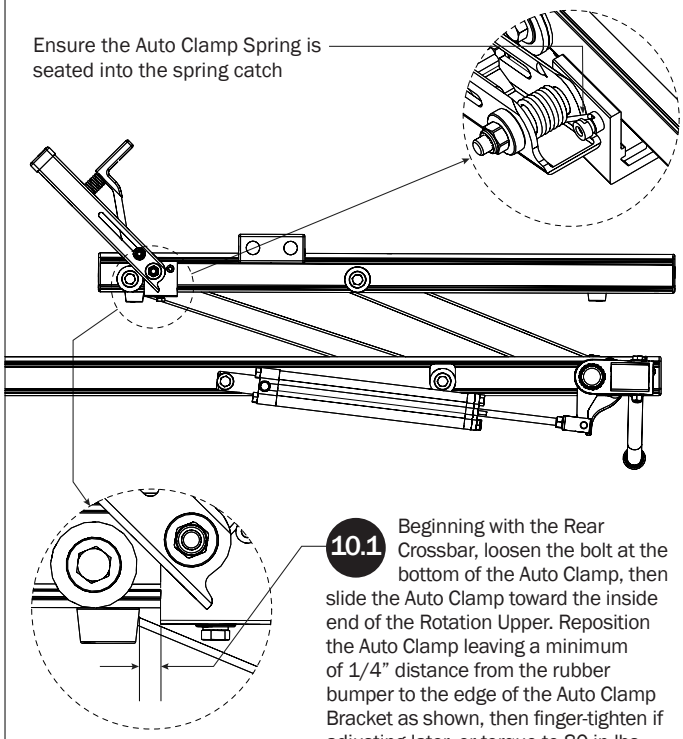

10.1 Beginning with the Rear Crossbar, loosen the bolt at the bottom of the Auto Clamp, then slide the Auto Clamp toward the inside end of the Rotation Upper. Reposition the Auto Clamp leaving a minimum of 1/4" distance from the rubber bumper to the edge of the Auto Clamp Bracket as shown, then finger-tighten if adjusting later, or torque to 80 in-lbs.

10.2 Prepare the L Post by removing the hex head bolt, lock washer, flat washer, and Bracket Clamp. Retain for installation Steps 10.4—10.8.

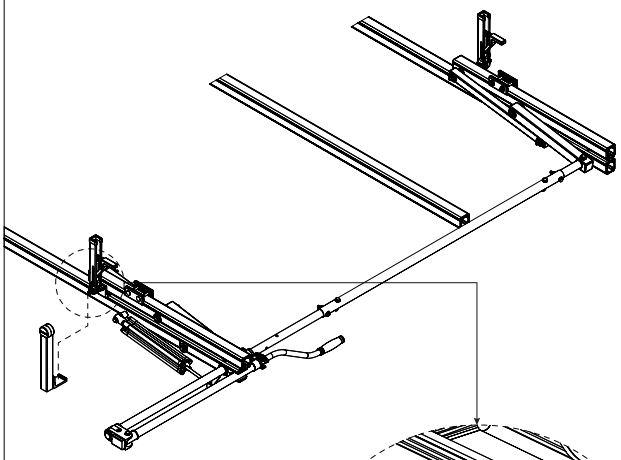

10.3 Place the L Post into the bottom groove of the Rear Crossbar, ensuring the L Post seats into the Crossbar's inside bottom groove as seen from the front of the Rear Crossbar

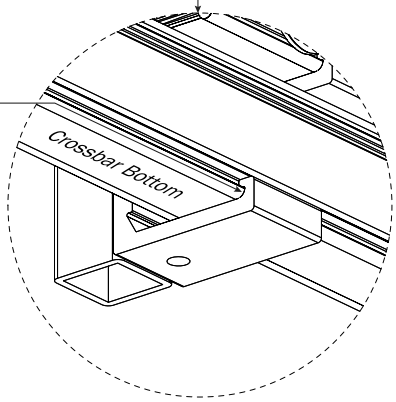

10.4 Slide L Post Bracket Clamp into bottom groove, then slide into L Post Bracket as shown

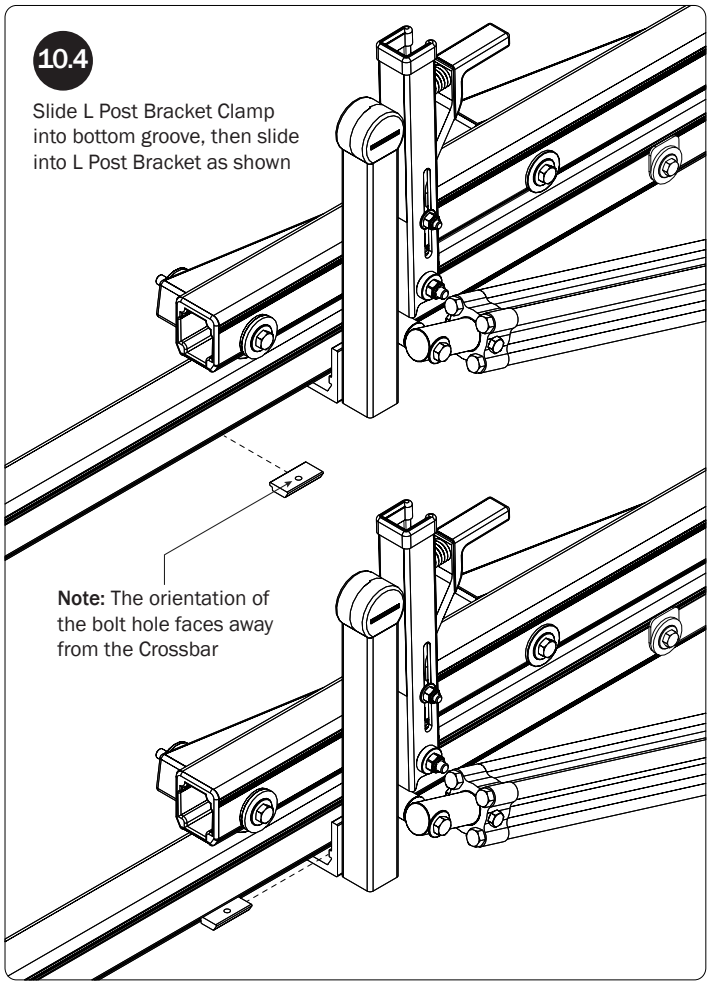

Note: The orientation of the bolt hole faces away from the Crossbar

10.5 Bracket Clamp sits in L Post Bracket as shown

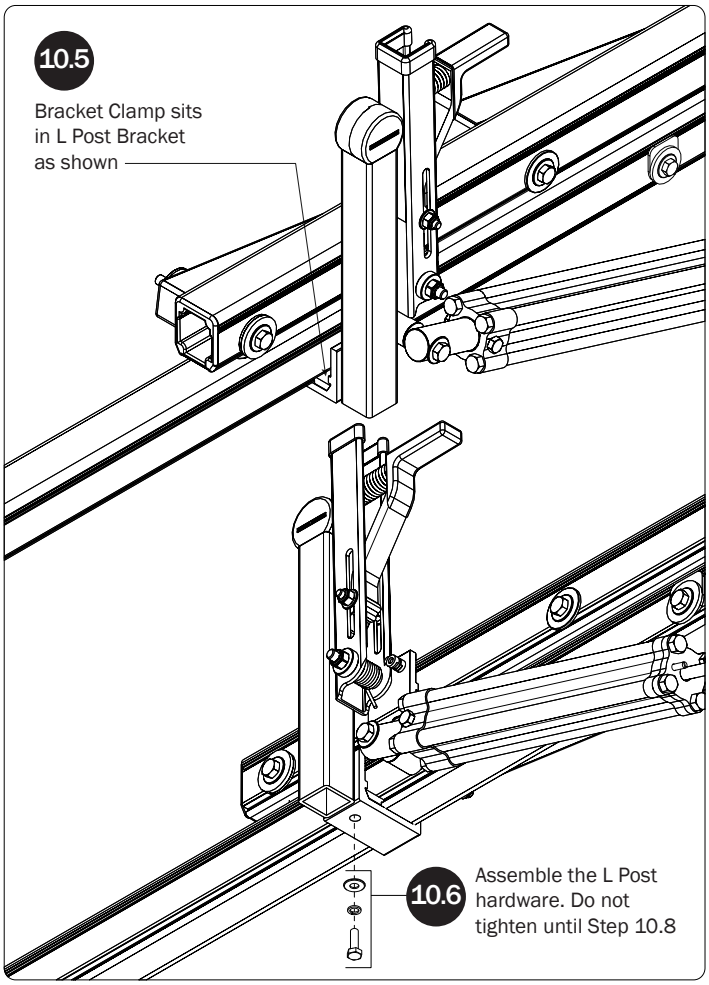

10.6 Assemble the L Post hardware. Do not tighten until Step 10.8

PRIME DESIGN™ A Safe Fleet Brand

PRIME DESIGN, A SAFE FLEET BRAND • Address: 1689 Oakdale Avenue #102, West St Paul, Minnesota 55118 • Phone: 651-552-8554 • Toll Free: 1.8.PRIME.RACK • Fax: 651-552-1799 • Email: info@primedesign.net • Website: www.primedesign.net

TM & © 2019 PRIME DESIGN. PROTECTED BY ONE OR MORE OF THE FOLLOWING PATENT NO.'s 6764268, 6971563, 2364879, 8857689, 8511525, 8991889, 2271515, 2364897, 9506292, 9481313, 9481314, 9796340, 6202807, 6427889, 9415726 AND OTHER PATENTS PENDING

10.7

Slide the L Post until parallel to the Auto Clamp and the gap between the two is even from top to bottom

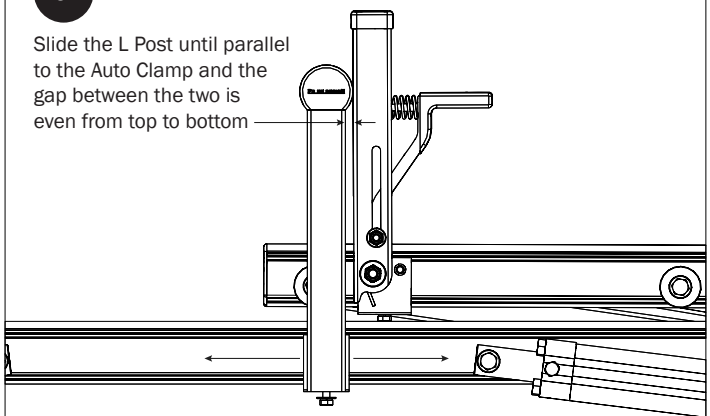

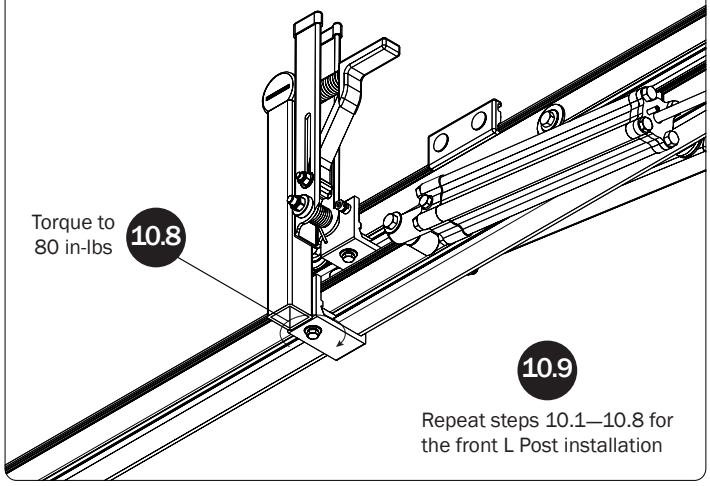

Torque to 80 in-lbs

10.8

10.9

Repeat steps 10.1—10.8 for the front L Post installation

Z POSTS

SEE QUICK START GUIDE FOR ADJUSTMENTS

11.1 Slide the Z Post into the Mounting Clamp Assembly

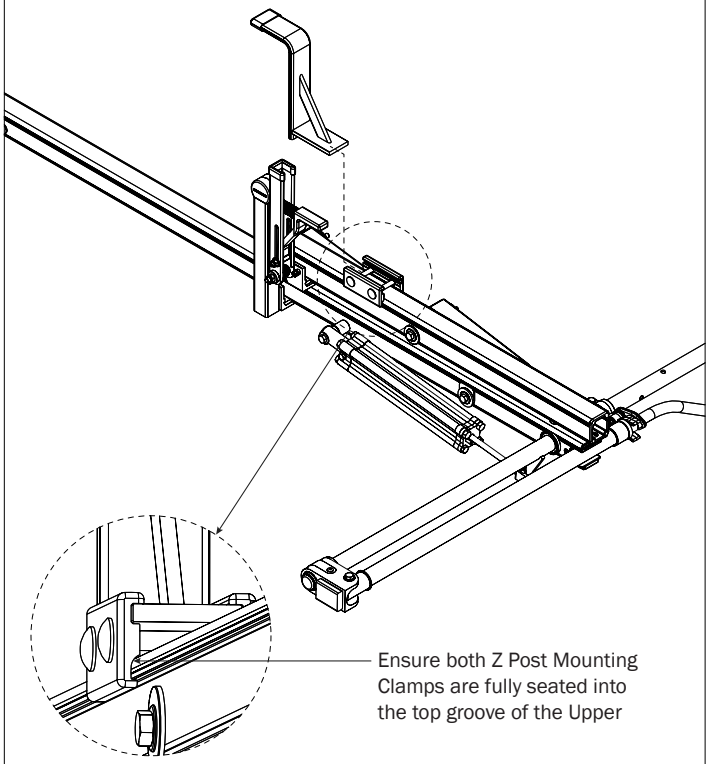

Ensure both Z Post Mounting Clamps are fully seated into the top groove of the Upper

11.2

Refer to the Quick Start Guide for Z Post positioning.

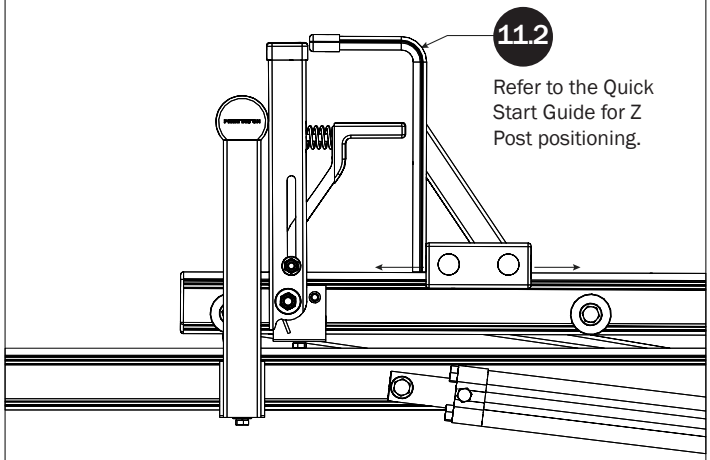

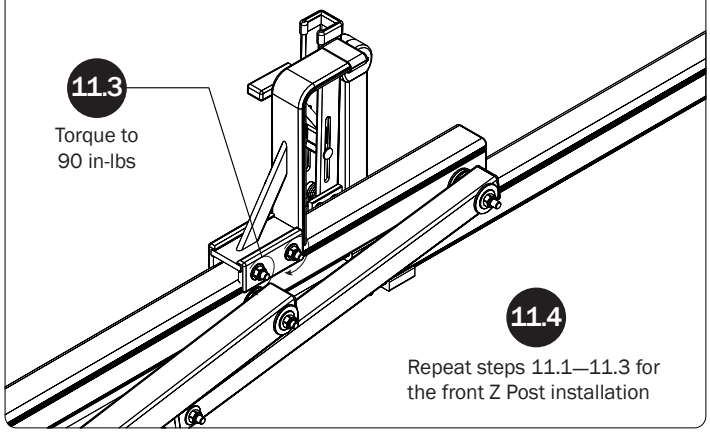

11.3

Torque to 90 in-lbs

11.4

Repeat steps 11.1—11.3 for the front Z Post installation

CYLINDER ADJUSTMENT

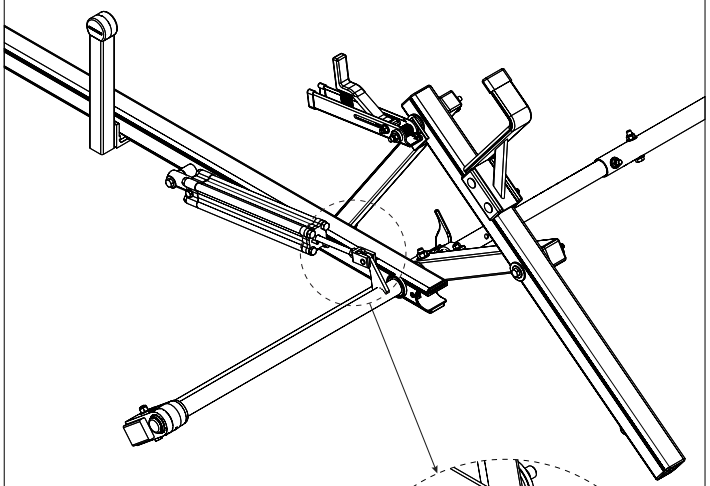

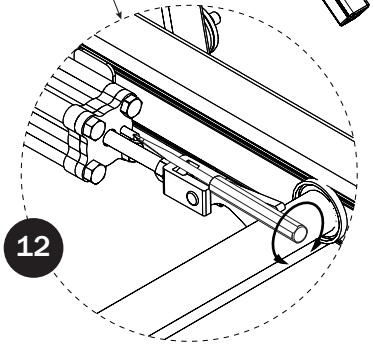

Adjust the Cylinder Flow Control Screw to allow approximately 3 seconds time for the ladder to glide down when operating the loaded Ladder Rack.

12

PRIME DESIGN™ A Safe Fleet Brand

PRIME DESIGN, A SAFE FLEET BRAND • Address: 1689 Oakdale Avenue #102, West St Paul, Minnesota 55118 • Phone: 651-552-8554 • Toll Free: 1.8.PRIME.RACK • Fax: 651-552-1799 • Email: info@primedesign.net • Website: www.primedesign.net

TM & © 2019 PRIME DESIGN. PROTECTED BY ONE OR MORE OF THE FOLLOWING PATENT NO.'s 6764268, 6971563, 2364879, 8857689, 8511525, 8991889, 2271515, 2364897, 9506292, 9481313, 9481314, 9796340, 6202807, 6427889, 9415726 AND OTHER PATENTS PENDING

LEFT SIDE ASSEMBLY SEQUENCE

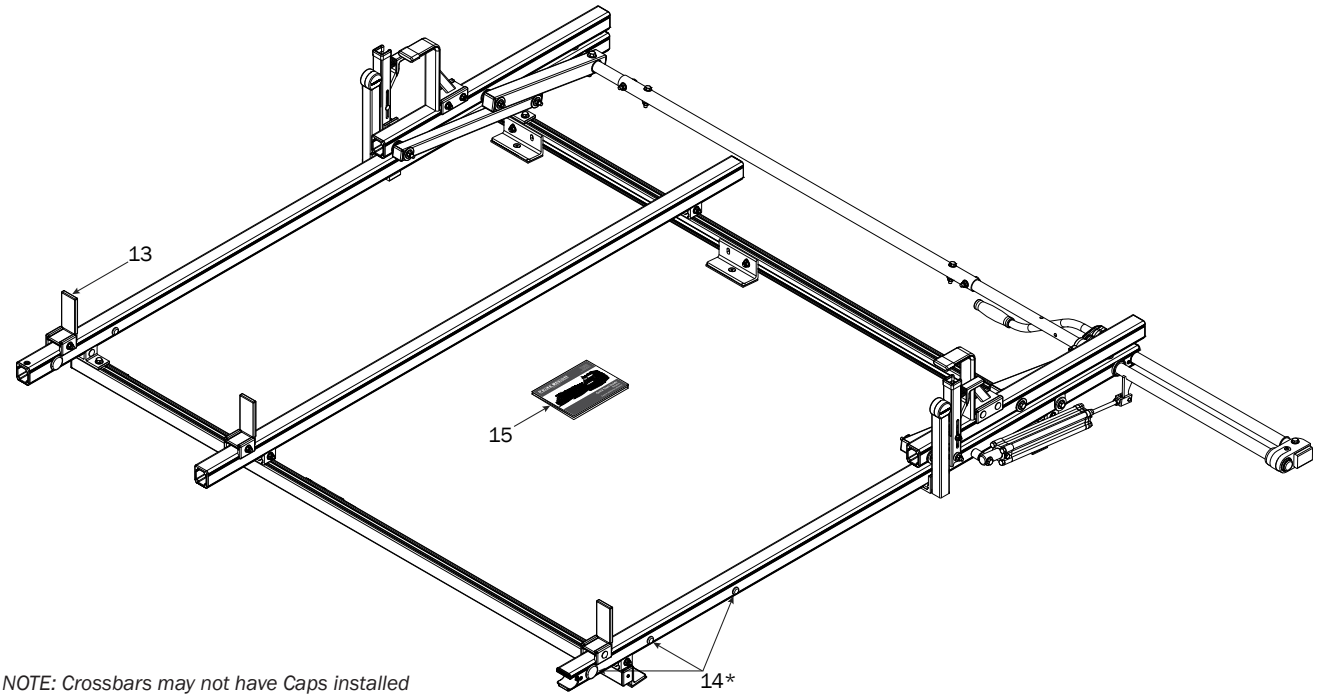

** NOTE: Crossbars may not have Caps installed from the factory. If factory-installed, proceed to Step 13 and ignore Step 14. If not installed, Caps will be included in the Hardware Kit. Press them into the Crossbars as shown in Step 14.*

LADDER STOPS

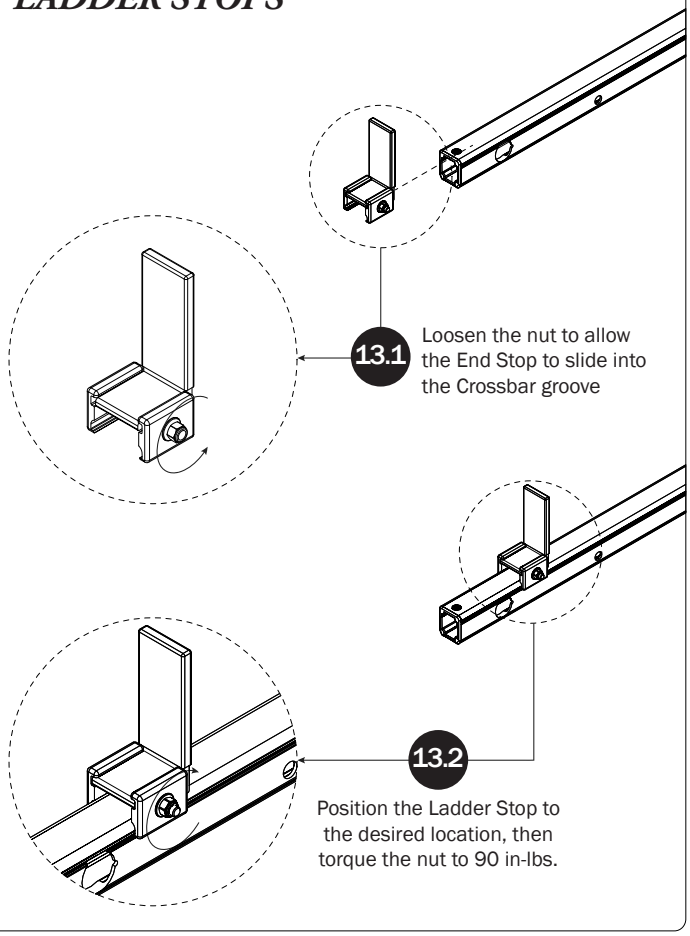

13.1 Loosen the nut to allow the End Stop to slide into the Crossbar groove

13.2 Position the Ladder Stop to the desired location, then torque the nut to 90 in-lbs.

CROSSBAR CAPS

NOTE: Some Front Crossbars may have additional drilled holes. Press Crossbar Caps into Crossbar holes if present and unused.

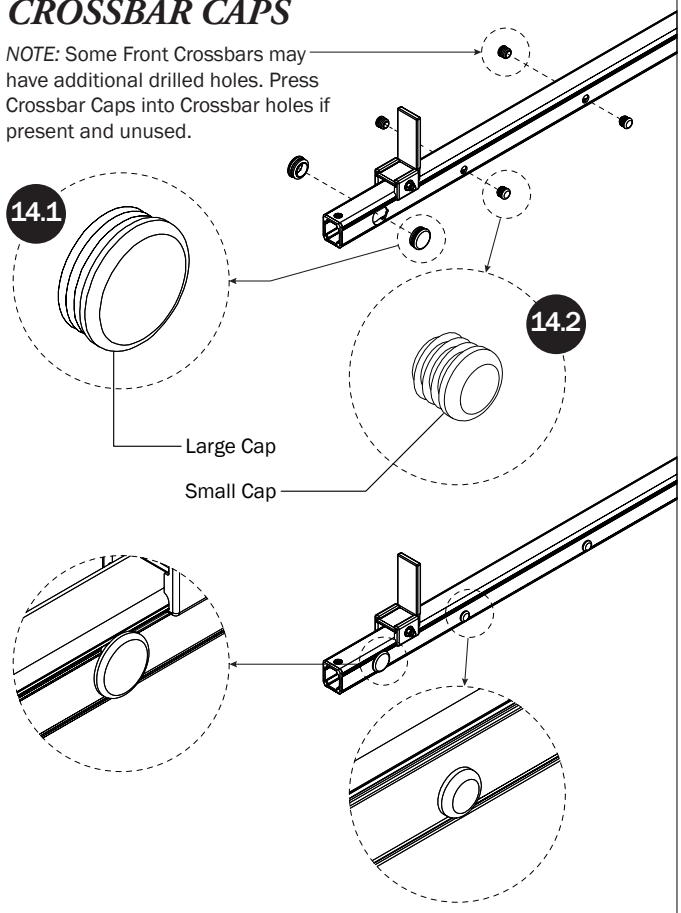

TM & © 2019 PRIME DESIGN. PROTECTED BY ONE OR MORE OF THE FOLLOWING PATENT NO.'s 6764268, 6971563, 2364879, 8857689, 8511525, 8991889, 2271515, 2364897, 9506292, 9481313, 9481314, 9796340, 6202807, 6427889, 9415726 AND OTHER PATENTS PENDING

QUICK START GUIDE

15 Place the Quick Start Guide into the vehicle's glove box for ladder setup and adjustment.

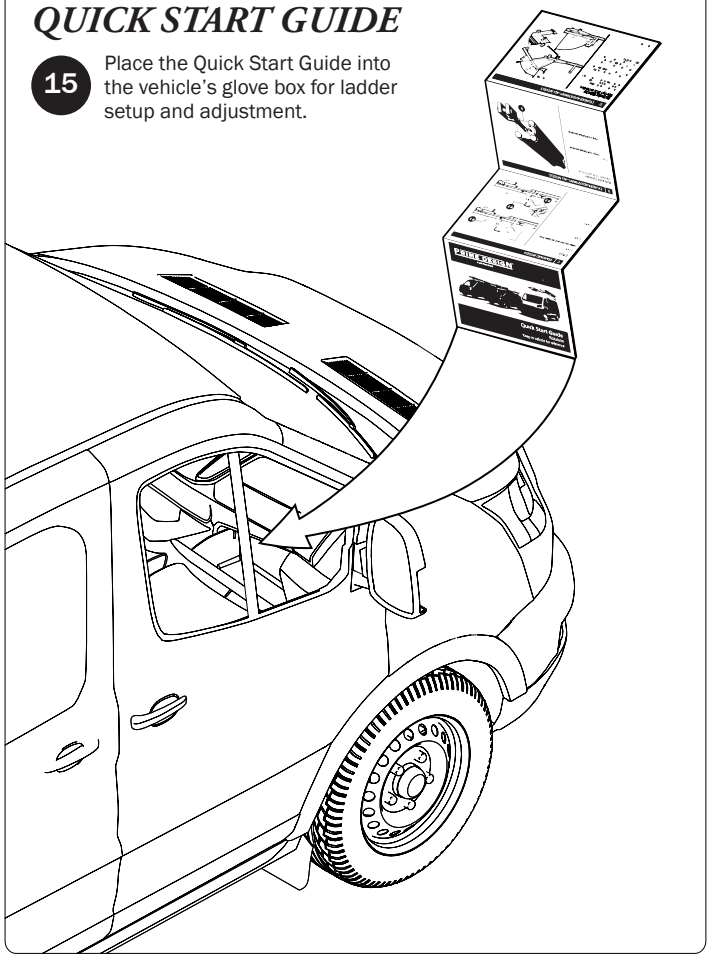

PRIME DESIGN, A SAFE FLEET BRAND • Address: 1689 Oakdale Avenue #102, West St Paul, Minnesota 55118 • Phone: 651-552-8554 • Toll Free: 1.8.PRIME.RACK • Fax: 651-552-1799 • Email: info@primedesign.net • Website: www.primedesign.net
TM & © 2019 PRIME DESIGN. PROTECTED BY ONE OR MORE OF THE FOLLOWING PATENT NO.'s 6764268, 6971563, 2364879, 8857689, 8511525, 8991889, 2271515, 2364897, 9506292, 9481313, 9481314, 9796340, 6202807, 6427889, 9415726 AND OTHER PATENTS PENDING